Instruction Manual

Model: FALCON

Electric Wheelchair



This manual electric wheelchair model referred to as FALCON. Before using the product, please read this instruction Manual carefully for the purpose of correct operation, especially where it is marked with ★.

Content

Guidance for Use **01**

To Users **02**

Safety Sign **03**

Product Construction **04**

Technical Parameter **06**

Electromagnetic Interference **09**

Guide for Safe Use **10**

User 10

Caregiver 10

Precautions for control panel use 11

Precautions for static wheelchair 11

Operating environment 12

Applicable road 13

Road driving 13

The motorized vehicle safety 13

Balance of driving 14

Attention when getting on/off the wheelchair 14

Attentions when dress in wheelchair 16

Through the obstacles 17

Reverse driving 17

Drive on inclined plane / slope / hillside 18

Load capacity 19

Attentions when up and down the stairs 19

Installation Guide **20**

Mounting safety belt 20

Mounting control panel..... 21

Operation Guide.....23

Press power on/off button.....24

Use joystick to control the wheelchair.....24

Use the horn 25

Braking..... 25

Battery Use.....27

Install / Remove battery..... 28

Charge battery..... 30

Over-discharge protector.....31

Over-current protector.....31

Battery socket cleaning 31

Folding and Unfolding..... 32

Fold the wheelchair 32

Unfold the wheelchair..... 33

Reclining Backrest..... 34

Maintenance..... **35**

Troubleshooting..... 36

Warranty 37

Warranty Card 38

Guidance for Use

The FALCON Electric Wheelchair is Class A. It is suitable for indoor and outdoor uses. It is a transport tool for single person use. A light weight, collapsible, easy to carry,safe&comfortable, suitable for the disabled and senior citizens.

⚠ WARNING

Users:

Please do not use and operate the FALCON electric wheelchair until you have fully read and understood this instruction manual.

If you have difficulty in understanding the WARNING, CAUTION and instructions, please contact your distributor or qualified technician to obtain professional technical guidance and help; otherwise danger or injury may occur as a result of incorrect operation.

Distributor and professional Personnel:

Before you have read and understood this Instruction Manual and the electric wheelchair, do not use and operate FALCON.

If you have difficulty in understanding the WARNING, CAUTION and instructions,please contact the manufacturer or distributor to obtain professional technical guidance and help; otherwise danger or injury may occur as a result of misleading the users.

To Users

Dear users ,

Thank you for using our FALCON electric wheelchair. Incorporating innovative design and precision manufacturing, FALCON electric wheelchair delivers excellent safety, comfort and portability to you. As your reliable friend, FALCON will help you enjoy free move and fresh air as you like.

Before operating your FALCON electric wheelchair for the first time, please read this manual carefully. This instruction manual will help you to understand how to set up, operate and maintain this wheelchair properly.

If you have any trouble understanding the instructions of this manual, or requires further assistance on setting up, operating and the maintenance your wheelchair, please contact your distributor or the manufacturer for more complete, specific and professional guidance and help.

Appendix:

Regional Distributors (if any, the following information will be provided)

Name: Discover Your Mobility Inc.

Address: 66 E Ten Mile Rd Hazel Park Mi. 48030 (866) 868-9694

Tel: (866) 868-9694

Fax: (586) 232-4394

Emall: Info@globalada.com

Safety Sign

The following signs will help you identify and understand FALCON's important cautious operation, imperative operation and prohibitive operation. These signs are extremely important, please go through them carefully.



Please read and observe the guidance provided in this manual.



A safety warning sign, or an indication of a dangerous operation that may endanger your safety or others' safety.



Secondary(auxiliary)device



The main application part



In the course of operation do not use mobile, walkie talkie, notebook or other radio transmitters.



Easy to be squeezed / crashed.



Store in clean & dry place protected from rain, snow, ice, salt and water.



Test of immunity to electromagnetism / RF of 30 V/M passed.



Corrosive substance contained in the battery.



Danger of explosion



Do not use batteries of different models & capacities, do not use old and new batteries together (replace the battery completely).



When using tools and other metal objects, keep away from the negative and positive poles of the battery; short circuit or electric shock may occur if the two poles are contacted.



Inflammable materials, do not expose to heat source such as naked flame or spark; do not transport the battery along with inflammable or explosive material.



Disposal and recycling--
Only authorized recycling companies can recycle parts of this wheelchair.

Product Construction

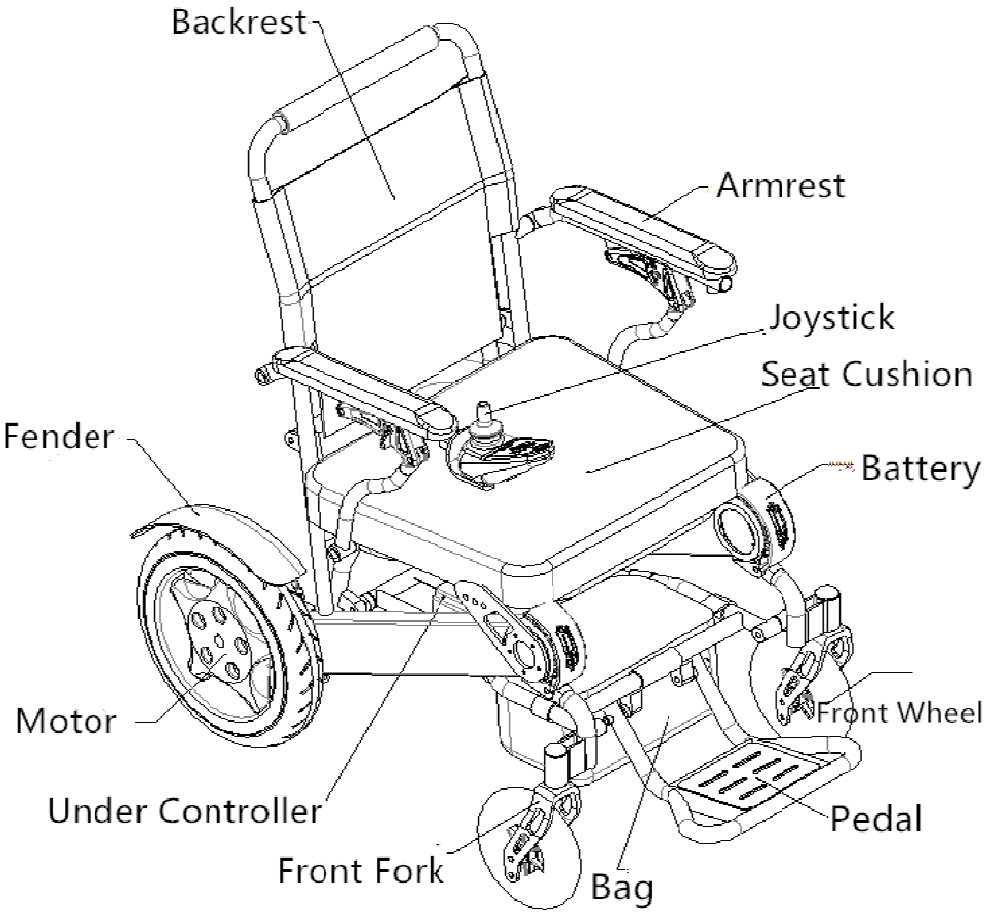

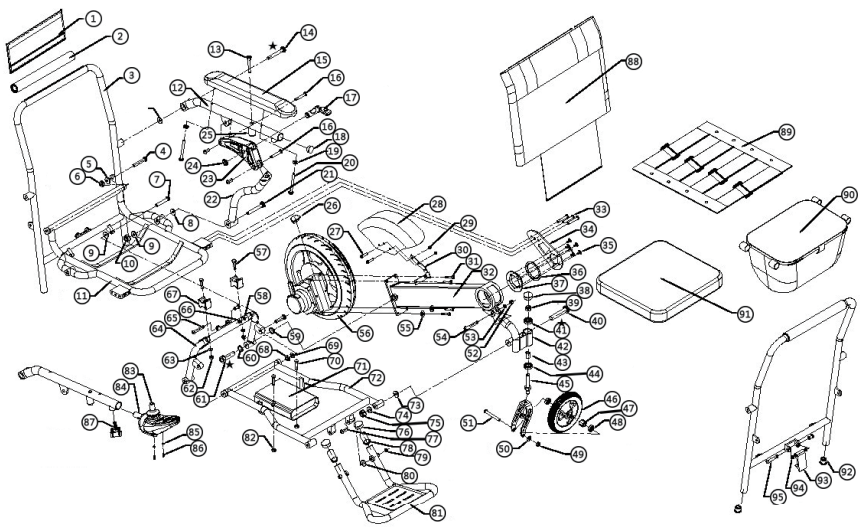

1.HAND CLOTH
2.FOAM TUBE
3.BACK FRAME
4.SCREW ARBOR M8X40MM
5.NYLON SPACER M8
6.HEX NUT 5MM
7.SCREW ARBOR M8*308
9.SHIM M8
10. JAM NUT M8
11.CUSHION FRAME
12.RAIL PIPE
13.SCREW ARBOR M6X20MM
14.SCREW ARBOR M8*44MM
15.PU ARM
16.LOCK SCREW M6*24MM
17.HANDLE / WRENCH
18.TUBE PLUG Φ22*Φ19
19.SHIM M5
20.SCREW ARBOR M5X30MM
21.HALF TOOTH SCREW ARBOR M8X63MM
22.ARM BRACE
23.ARM REST SUPPORT
24.SPLIT WASHER
25.LOCK COLUMN
26.MOTOR PLUG
27.SCREW ARBOR M5X10MM
28.FENDER
29. JAM NUT M5
30.FENDER SUPPORT PLATE
31.SCREW ARBOR M6X15MM
32.BATTERY TUBE
33.SCREW ARBOR M6X15MM
34.CUSHION FRAME CONNECTING PIECE
35.SCREW ARBOR M5X14MM
36. AXLE SLEEVE
37.ROTATION SHAFT
38.PIPE CLOSEΦ32*Φ29
39.JAM NUT M12
40.HALF TOOTH SCREW ARBOR M8*70MM
41.AXLE BEARING ¢ 28* ¢ 12*8MM
42.FRONT WHEEL SUPPORT FRAME
43.SCREENED PIPE ¢ 16.5*1.6T*24.5MM
44.AXLE BEARING ¢ 28* ¢ 12*8MM
45.VERTICAL SHAFT
46.PU UNIVERSAL WHEEL
47.CREENED PIPE ¢ 12*1.5T*40.5MM
48.AXLE BEARING ¢ 22* ¢ 8*8MM
49.JAM NUT M8
50.SHIM M8
51.HALF TOOTH SCREW ARBOR M8X80MM
52.JAM NUT M8
53.SHIM M8
54.JAM NUT M8X40MM
55.SHIM M6
56.MOTOR DRIVING WHEEL
57.SCREW ARBOR M6X40MM
58.SHIM M8
59.SHIM Φ22*Φ16*3MM
60.SHIM M16*1.5MM
61.SCREW ARBOR M16*86
62.JAM NUT M8
63.SHIM M5
64.SUPPORT FRAME UNDER THE BACK OF THE BACK
65.LOCK SCREW M6*48MM
66.JAM NUT M8
67.SUPPORT SEAT
68.OUTER SIX ANGLE M8
69.PLASTIC GASKET 1.6MM
70.SCREW ARBOR M5X40MM
71.LOWER CONTROLLER
72.LOWER SUPPORT FRAME
73.PLASTIC GASKET
74.SHIM M8
75.JAM NUT M8
76.PIPE CLOSE Φ22*Φ19
77.HALF TOOTH SCREW ARBOR M8*65MM
78.FOAM RUBBER PIPE
79. JAM NUT M8
80.PLASTIC GASKET M8
81.PEDAL ASSEMBLY
82. JAM NUT M5
83.UPPER CONTROLLER / JOYSTICK
84.CONTROLLER SUPPORT
85.SHIM M5
86.SCREW ARBOR M5*15MM
87.LOCK KNOB M6*20MM
88.BACK CLOTH
89.CUSHION CLOTH
90.STORAGE BAG
91.CUSHION
92.TUBE PLUG
93.BACK WRENCH
94.SHIM Φ16*Φ8.2*1.8MM
95.LOCK SCREW M6*48MM

Technical Parameters

Model	FALCON
Folded Size	580*325*780 mm (L*W*H)
Unfold Size	960*580*930 mm (L*W*H)
Max weight Capacity	180 kg
Motor	
Type	Brushless DC Motor
Rated Power	250 W*2pcs
Input Power	DC 24V
Brake System	Intelligent Electromagnetic Brake
Battery	
Type	Lithium Battery
Capacity	6Ah*2pcs
Output Voltage	DC 24V
PCS	Two
Charging Time	6-8 Hours
Controller	
Type/Plug Type	Assist type/European Standard, 2 Core
Input Power	AC 100-220 V, 50-60Hz
Output Voltage/Current	DC 24V, 2A
Front Wheel	
Outer Diameter/Tire Width	7" × 1.77"(180 mm x 45 mm)
Type	Solid Tire
Material	PU Solid
PCS	2 PCS
Rear Wheel	
Outer Diameter/Tire Width	12.5" ×2.25"(320 mm x 57 mm)
Material	PU Solid Tire
Number	2 PCS
Weight	
Without Battery	23.5 kg
With two Batteries	26.5kg
Maximum Grade ability	6°
Driving Range	18 km with two batteries

Max Speed	6 km/h (3.75 mph)
Turning Radius	835 mm
Highest Obstacle Capability	40 mm (1.57")
Full overall length	975mm
Overall width	610mm
Stowage length	690mm
Stowage width	425mm
Stowage height	890mm
Rising	/ mm
Total mass	31.7kg
Mass of heaviest part	0.62kg(seat)
Pivot width	835mm
Reversing width	960mm
Turning diameter	1670mm
Ground clearance	70mm
Required width of angled corridor	960mm
Required doorway entry depth	1750mm
Required corridor width for side	960mm
Overall length with legrest	970mm
Overall width	610mm
Folded length	320mm
Folded width	610mm
Folded height	780mm
Total mass	26.5kg
Mass of the heaviest part	0.62kg
Static stability downhill	5°
Static stability uphill	8°
Static stability sideways	15°
Energy consumption	18km
Dynamic stability uphill	8°
Obstacle climbing	35mm
Maximum speed forward	6km/h
Minimum braking distance from	1000mm

Seat plane angle	4°
Effective seat depth	420mm
Effective seat width	480mm
Seat surface height at front edge	480mm
Backrest angle	8°
Backrest height	400mm
Footrest to seat distance	360mm
Leg to seat surface angle	105°
Armrest to seat distance	250mm
Front location of armrest	420 mm
Horizontal location of axle	600mm
Minimum turning radius	835mm
Maximum occupant mass	-- kg
Seat plane angle	4°
Effective seat depth	420mm
Seat width	480mm
Effective seat width	480mm
Seat surface height at front edge	500mm
Backrest angle	8°
Backrest height	400mm
Backrest width	480mm
Headrest in front of backrest	/ mm
Headrest height above seat	/ mm
Footrest-to-seat distance	360mm
Footrest clearance	70mm
Footrest length	260mm
Footrest-leg-angle	95°
Leg-to-seat-surface angle	105°
Armrest-to-seat distance	250mm
Front armrest-to-backrest	360mm
Armrest length	330mm
Armrest width	50mm
Armrest angle	6°
Distance between armrests	480mm
Front location of armrest	420 mm
Propelling wheel diameter	320mm
Horizontal location of axle	20mm

Vertical displacement of wheel	185mm
Castor wheel diameter	/ mm

Electromagnetic Interference

WARNING

Under specific conditions, electromagnetic interference can cause accident to the electric wheelchair. Therefore, it is important for FANCON users to adequately understand relevant instructions, which can help users take corresponding protection measures to avoid or mitigate the risk to the minimum.

Electric wheelchair is subject to electromagnetic interference. The interference sources comprise electromagnetic waves emitted by broadcasting station. TV station, radio transmitter, two way radio device, mobile and pc; Interfer ence of these electrom agnetic waves may result in failure of the control system or the brake system of the electric wheelchair.

WARNING

1.  Though FANCON has passed 30 V / M electromagnetic interference test at factory and has a certain degree of immunity to some common electromagnetic interference in life, user shall still observe the following rule: when the electric wheelchair is powered on in operation , do not turn on or operate portable transceiver, receiver, radio or other communication devices .

2.Keep away from radio wave emission sources as possible, such as radio station and TV station.

3.Where FALCON moves or stops out of control, cut off the power immediately.

4.No modification of any form to FALCON by users is allowed, including adding or removing any parts.

Guide for Safe Use

User

WARNING

1.  When using tools and other metal objects, keep away from the negative and positive poles of the battery; short circuit or electric shock may occur if the two poles are accidently contacted.

2.Before using FALCON, user must read and adequately understand this Manual.

3.Escort is required when practicing moving forward, turning, crossing over obstacle and braking etc, until the user can independently and proficiently perform these operations.

4.Where safety cannot be ensured, do not try any new operations.

5.Check the environment in which FALCON is to be operated for any potential danger and take measures in place to avoid the dangers.

Caregiver

WARNING

1.Cooperate with the user and tak e advice from the doctor, nurse or therapist to determine safe ways of operation adaptable to the user's ability.

2.To move FALCON manually, the electromagnetic brake must be powered off to allow the wheelchair to get into manual state; it shall be noted that electromagnetic brake will not work at all when it has been powered off.

3.When moving FALCON manually, choose safe and reliable point to exert the push force to prevent the wheelchair from tipping over.

4. When pushing this wheelchair, you must use the push handle in the back. This will prevent the wheelchair from overturning backwards when pushing .

5. Check the push handle, make sure the push handle does not rotate or slide while pushing the user through obstacles.

6.When helping the user cross over obstacle:

6.1 To prevent the user's back from being hurt, the user shall be maintained in anappropriate position that is in line with human body kinetics. When you lift up or support the user or the tilted wheelchair, you can slightly bend your knees while maintaining your back vertical.

6.2 To allow the user to be prepared and reduce accident risk, before starting and action, tell the user what you are going to do and explain why; also tell the user what you wish him or her to do.

6.3 When you are to tilt the wheelchair backwards, remind the user to back against the backrest cushiontig htly.

6.4 When helping the user operate the wheelchair to move up and down the steps within its crossing- over capability, move slowly to avoid damage to the wheelchair or injury to the user due to strong impact.

6.5 Do not try to cross over obstacles beyond FALCON crossing-over capability.

Precautions for control panel use

WARNING

1 .The locking devices of the control panel need to be frequently checked and adjusted (A 1) to avoid failure of the wheelchair due to collision or loosening of the panel.



A1

2 .Where any button on the control panel fails or is not sensitive enough, user must stop using the wheelchair immediately and contact the after-sale service for repair.

Notes when using joystick

1 . Check and adjust the Settings every six months. (If necessary, check and adjust often).

2 .If you find any change of functions in the setting of the controller joystick (A2) , please contact the manufacturer.



A2

Precautions for static wheelchair

WARNING

1 . When you stop using your FALCON wheelchair, even for as hort duration, make sure you turn off its power. This can prevent:

• Prevent the control panel from being touched accidently by yourself or others, which may cause the wheelchair to move.

•Prevent FALCON from interference of accident electromagnetic source that can affect its normal operation.



2 . Please ensure that others, especially your as sistant know how to use the joystick controller properly. Never play around with the joystick controller.

Operating environment

WARNING



This electric wheelchair shall not be used or stored in environment of rain, snow or freeze.

1. Malfunction may occur if the device is in contact with water or in environment of too much moisture; in addition, since the frame, motor and other parts of the wheelchair are not fully waterproof, environment of moisture may result in rusting or corrosion inside FALCON .

To prevent malfunction, the following shall be observed:

•Avoid using or storing FALCON in an environment subject to direct water impact (e.g.,rain) or high moisture as possible.

•Do not use FALCON when you are taking a shower, sauna or swimming.

•Avoid using FALCON near water sources (e.g., river, lake or ocean).

•If the control panel has been damaged, replace it before use.

•If the joystick is broken, replace it as soon as you can.

• Make sure all the electric connections are safely secured.

•Never rinse this electric wheelchair. If electric wheelchair gets wet, take out the batteries as soon as possible, dry the wheelchair and batteries completely before attempting to use them again.

2.If you have to operate FALCON on wet or smooth ground surface, you must be careful to move slowly, and the following shall be observed:

• You must make sure that you are operating in a safe environment.

• If one or two drive wheels lose traction, stop operating immediately to prevent this

electric wheelchair from running out of control.

•Never operate on slopes or ramps with snow, ice, water or oil on top.

•Seek help immediately when you are stuck in a wet environment.

3.When the wheelchair is not in use, turn off its power, charge the battery full and keep it at a clean and dry place.

Applicable road

WARNING

1.FALCON is only suitable for concrete, asphalt and indoor floor surface.

2.Do not use FALCON in sandy or coarse dirt rugged terrain, doing so may cause damage to wheels, bearings, shaft or motor parts, as well as loose fasteners may occur.

Road driving

WARNING

In most countries and regions, operating electric wheelchair on public roads is illegal.

Operating FALCON electric wheelchair on the road or in the parking lot is dangerous.

1. For easy recognition at night, Reflective tapes are placed on the electric wheelchair (C1). The user can also wear reflective clothing.



C1

2. When operating this electric wheelchair in the public, always make eye contacts with driver of the incoming vehicle before you go. If the re is any doubt, yield until it is safe to operator.

The motorized vehicle safety

WARNING

1. Do not use FALCON when taking bus, metro, train, plane or ship if possible.

2.If you have to use FALCON when taking such vehicles. you must tie the safety belt in place, and try to find a place where you can fix the wheels or the wheelchair to prevent from being damaged when the vehicle brakes or a traffic accident happens.

3.Never place FALCON in the front of transport vehicles, doing so will interfere with the driver.

4.When getting on or off the transport vehicle, if an assistant need to lift the wheelchair, grip the edge of the seat frame , never hold the handrail or back of the wheelchair chair to lift. Do not lift the wheelchair while the user is sitting on it.

Balance of driving

WARNING

When driving FALCON, try to maintain the balance of the gravity center and stability to avoid tipping over in the course of moving forward or backward.

The balance of the gravity center is generally subject to the following factors:

1.The height and angle of the seat.

2.Changing user's body position and posture.

3.The ramp or slope gradient.

4.Changing weight distribution of the wheelchair by adding or removing carriage.

5. If you need to modify or adjust the electric wheelchair, please consult your supplier in advance, and the manufacturer must authorize its modification. The modified wheelchair may need to be adjusted prior to use. After modifying the wheelchair, be cautious while operating until you are familiar with the wheelchair's new balance and center of gravity

Caution:Do not modify or adjust FALCON configuration or construction yourself.

Attentions when getting on/off the wheelchair

WARNING

Getting on and off the electric wheelchair affects the center of balance of both you and the wheelchair. With improper techniques, falling or tipping over can occur, resulting in injuries and /or damage to the wheelchair.

Avoid falling:

When you are ready to seat in the electric wheelchair, you must turn off the power supply. Otherwise, if you touch the joystick, it may lead to unexpected movement of the wheelchair.

Ensure the motor is locked, and the wheelchair does not move on its own.

Learn the safest way of moving your body from your professional health care assistant, position your body correctly while sitting in the wheelchair, and know how to support yourself in the process of getting on and off the wheelchair.

Let others help you until you are sure that you can do it on your own.

1.Move your electric wheelchair as close as possible prior to sitting.

2.Rotate the front wheels forward.

3. Be careful of the pedal. Fold it up as far as possible (as shown in figure D2)



D1



D2

• Never stand on the foot plate, this will damage the wheelchair.

4.Fold up the armrests if you need more space getting on and off the wheelchair(as shown in figure D1)

5.When getting on the wheelchair, sit down as quickly as possible.

Precautions for reaching out hands and tilting body

WARNING

Stretching or tilting your body will affect the center of gravity and balance of the electric wheelchair. With improper techniques, falling or tipping over can occur, resulting in injuries and/or damage to the wheelchair. The following tips can reduce the risk of falling or tipping over.

1.Never move out of the seat of your wheelchair while stretching or tilting your body, keep your back and rare end in contact with the backrest and seat as much as possible.

2.If you are leaning forward, keep your rare end in contact with the seat as much as possible (as shown in figure E1),

3. Never attempt to reach for an item that is far, move your wheelchair as close as possible to the item that you are trying to reach.

4. Never attempt to pick up an item on the floor. (as shown in figure E2)

5. When you are extending your body, do not exert pressure on a single point of the wheelchair, doing so may cause the wheelchair to tip over.

6.Never lean on the top of the backrest, doing so may cause the wheelchair to tip over.

7.If you do extend or tilt your body, you are doing so at your own risk.

Remember:

WARNING

1.Move your electric wheelchair as close as possible to the object you want to reach.

2.Rotate the front wheels as forward as possible, this will make the electric wheelchair more stable .

3. Turn off the power supply of the wheelchair when it's not in use.



E1



E2

Attentions when dress in the wheelchair

WARNING

Attention: Dressing while sitting in the wheelc hair affects the center of balance of both you and the wheelchair.

To make the electric wheelchair more stable, rotate the front wheels as forward as possible.

1. Never move out of the seat of your wheelchair while dressing, keep your back and rare end in contact with the backrest and seat as much as possible.

2.Never shit or tilt your body sideways during the dressing process.

3.Never put pressure on the pedal while dressing.

Through the obstacles

WARNING

You need to overcome some obstacles during your daily uses of your FALCON electric wheelchair, these obstacles include threshold, elevator, ramp, pits and broken pavement, etc.

1. Attention: threshold is very dangerous. Even a small height change may cause the electric wheelchair to tilt and roll over.

• You may have to install ramps at entries of exit doors as well as remove or cover threshold strips between rooms

2.When operating the electric wheelchair, beware of obstacles and avoid them as much as possible in the area that you are driving on .

3.Operate your wheelchair slowly while going over obstacles.

4. To better maintain your center of balance while operat ing through obstacles:
• When you are going over an obstacle, lean your body slightly forward.
• When you are moving downward through an obstacle, lean your body slightly backward.

Reverse driving

WARNING

When you drive the FALCON electric wheelchair in reverse, you need to be more careful. If the rear wheel hits an object, you may lose control and tipping over can occur.

1.When driving in reverse, drive as slow and steady as possible.

2.When driving in reverse, keep an eye on what's behind you and make sure the path is clear.

Drive on inclined plane / slope / hillside

Caution

When operating on the slope, the center of balance of you and your electric wheelchair will change.

Attention: “slope” may be a ramp or hillside. Operate only if you are sure it is safe to do so, have someone help you while you are operating on a slope.

Attentions:

1.Never use the wheelchair on a slope that is steeper than 10 degrees.

2.Never use the wheelchair on a slope if there is snow, ice, water or oil on it.

3.Never use the wheelchair on a slope that has uneven surfaces or a change in the slope grade.

4.Be aware of a slope that has a drop off at the bottom, this may cause the wheelchair to tip forward.



Load Capacity

WARNING

1.The maximum load capacity of FALCON is 180 kg. The total weight of the user and all carriage should never exceed this limit.

2.The backrest's load capacity is less than 75 kg, do not press against the backrest.

3.Never perform any weight training on this wheelchair, even if the total weight of the user and all weights does not exceed the weight limit.

4. If the load exceeds the maximum load capacity, it could damage the seat, frame, fasteners, motors etc., and may cause injuries to its user.

5. Damage to the wheelchair caused by exceeding this weight limits voids all warranty.

Attentions When Up and Down the Stairs

WARNING

This electric wheelchair is not suitable for traveling up and down the stairs, or on the escalator. Pay attention to the following cautions when using the elevator.

- Do not use the wheelchair on any stairs or the escalator.
- The elevator can be used when you are sitting on the wheelchair. Make sure the elevator stops and the door is completely opened before driving inside.

1.When the elevator is not available, the wheelchair needs to be folded before carrying.

2.If the user wants to move the electric wheelchair between floors by stairs, the assistant should note the following:

- the user must get off the electric wheelchair.
- Fold the electric wheelchair. Before folding, the joystick controller must be taken off.
- Avoid collision when moving the electric wheelchair up and down stairs.

Installation Guide

Mounting safety belt

WARNING

The safety belt is for fixing user's body only and prevent the user from failing off the chair. Where an accident occurs, it cannot provide adequate protection for you. The safety belt can be adjusted per the user's needs.

Installation of the safety belt:

1.Lead the head of the safety belt through the middle space between the reinforcement tubes at the left and right backrests under the rear part of the chair.

2.Attach AB buckle to the belt.

3.Clip the plastic safety buckle into the place where the AB buckles are attached.







Adjust the safety belt until user feels comfortable.

- After sitting down, insert the plastic card into the plastic shell, until you hear a clicking sound.
- Adjust the plastic safety belt to its appropriate length, never over tighten the safe belt as this may cause discomfort.

Unlock the safety belt:

- Press the button of the plastic shell aside, and pull out the plastic card.

Caution

Before each use, make sure the safety belt is fixed onto the electric wheelchair properly, and is adjusted to the user's comfort level.

Before each use, check whether the safety belt is loose or damaged. If there is any issue, contact the supplier immediately to repair.

Mounting control panel

The joystick controller can be installed on either the left or the right armper its user's needs.

1. As shown in Fig.G1, Install the controller into the open slot on the arm of the chair, on the right side (if user needed, can change to left side).

2. As shown in Fig. G2, tighten knob located under the armrest to secure the controller in place.

3. As shown in Fig. G3, Connect the controller wire harness to the CPU wire harness. Take care the line up the pins properly as arrow tip indicate, so that they do not get bent, broken or damaged.

Slide joystick Controller into armrest

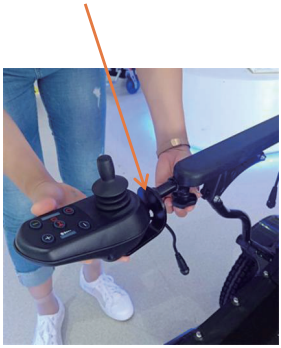

G1

Secure joystick controller knob



G2

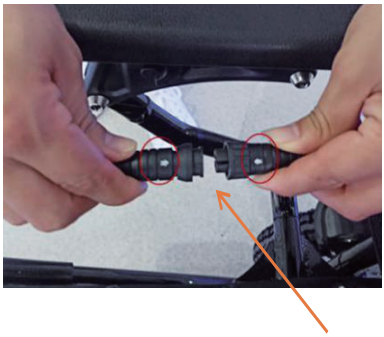

G4

Note: Make sure connector pins “white arrow” to “white arrow”.

The control panel controls the FALCON electric wheelchair. It consists of the following sections:

Operation Guide

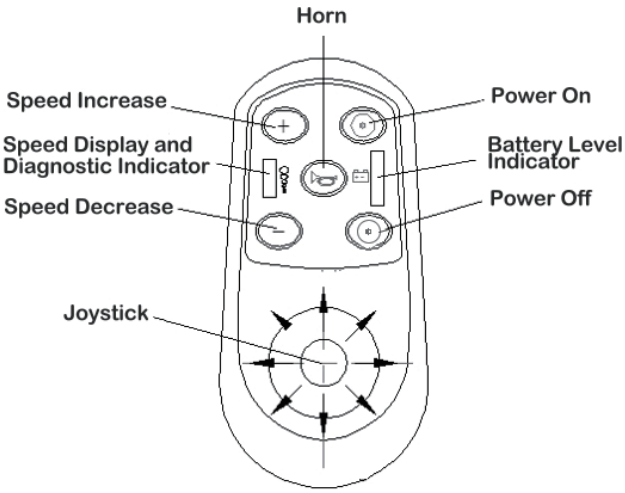

1.**Power on button:** Press this button to power on the wheelchair.

2.**Power off button:** Press this button to power off the wheelchair.

3.**Battery Level Indicator:** Indicating battery power status.

4.**Speed Display and Diagnostic Indicator:** When the light is on, FALCON is working, specific indication of the lights five lights totally; Where one LED is on ,it's at the lowest speed, whereas all five are on, it's at the highest speed.

5.**Speed Increase:** Press this button to speed up. The max speed is 6KM/HR(3.75 miles/hr).

6.**Speed Decrease:** Press this button to slow down.

7.**Horn:** Press the horn to sound.

8.**Joystick:** The control lever controls the direction and speed of the wheelchair, push the lever towards the target direction.

If the LED flashes intermittently, it's indicating diagnosis information. Refer to the table below for specific indications.

	The lowest LED flashes: low power The second LED flashes: the control lever has no signal The third LED flashes: charging, under control The fourth LED flashes: Motor connection failed The fifth LED flashes: electrodynamic braking disconnected

Press power on/off button

1.Press the power on button to power on the wheelchair.

2.Press the power off button to power off the wheelchair.

Use the Joystick to Control the Wheelchair

WARNING

While operating at high speed, do not attempt sharp turns or stop suddenly, doing so may cause the wheelchair to tilt or tip over, resulting in injuries to the user and/or damage to the wheelchair.

The joystick is equipped with 360°mobility, it controls the direction of the wheelchair smoothly, and is very easy to operate. While not operating, the spring in the joystick allows it to return to the center of the initial state, making the wheelchair brake automatically.

Push the joystick to the direction you wish the wheelchair to move to, Joystick has proportional control ability. The speed is limited within 6 km/h (3.75 miles per hour).

If you wish to decrease the speed of the wheelchair, release the joystick. The wheelchair will automatically slow down.

When operating this wheelchair for the first time, push the joystick forward slightly, and you should operate at a slow and safe speed. This practice will help you to learn how to control the wheelchair, speed up gradually as you become more familiar with using the joystick to control the wheelchair.

While operating the electric wheelchair, please note the following:

1.Adjust the control panel to the appropriate settings.

2.Turn on the power supply. Please refer to the previous section on "press the power on/off button".

3.Move the joystick as shown on the table below.

4.Stop:Release the control lever (the wheelchair will slow down quickly) .

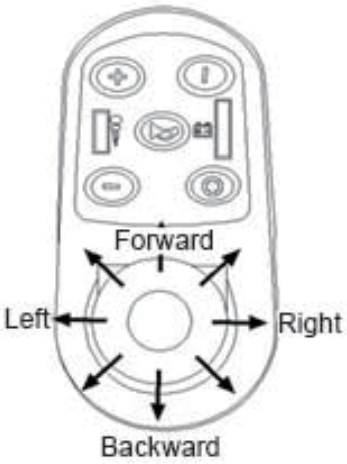

Movement	Operate the joystick
Forward	Move the joystick forward
Backward	Move the joystick backward
right	Move the joystick to the right
left	Move the joystick to the left

Use the horn

Press the horn button on the control panel to sound when passing through crowds.

Braking

Caution

After any adjustment, repair or maintenance, please make sure all accessory parts are installed tightly before operating this wheelchair, otherwise it may cause injuries to the user and/or damage to the wheelchair.

Please do not open or close the electromagnetic brake when the power is on.

Locking or unlocking the electromagnetic brakes to the side of the motors will allow you to switch your powerchair between manual/free wheel mode and electric mode.

The electromagnetic brake

Find the motor electromagnetic brake release lever and perform the following:

Flip the brake backwards with the brake release lever will switch the wheelchair to its electric mode as show on the picture to the left.

Flip the brake forward with the brake release lever will switch the wheelchair to its manual/free wheel mode as shown on the picture to the right

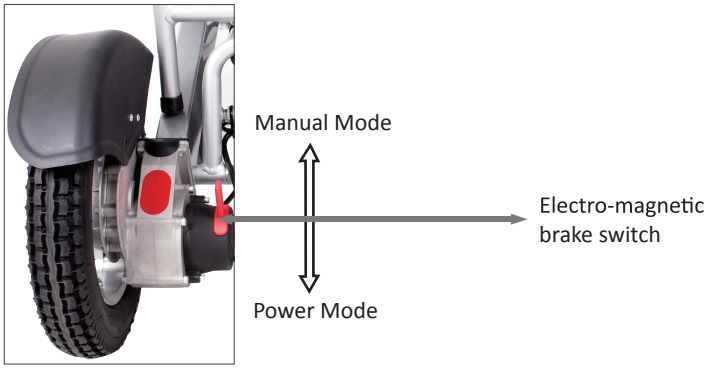

Electromagnetic brake states:

This wheelchair has two status: LOCK and UNLOCK , which are switched through turning the brake lever.

LOCK state indicates that the internal clutch of the electromagnetic brake is engaged and the electromagnetic brake is started. Before powering on and operating the control lever to a direction, the motor wheel will not rotate, purpose: when user is getting on / off the wheelchair, this will make sure the wheelchair will not move and can even stop or start on slope.

UNLOCK state indicates that the internal clutch of the electromagnetic brake is disengaged and the electromagnetic brake is closed without braking. In this state, the motor wheel can rotate even when the power is off Purpose: allow to move the wheelchair manually.

Caution: before using the wheelchair, make sure the electromagnetic brake works normally, and the brake lever is in LOCK state.

Battery Use




Do not use batteries with different capacity and models at the same time; when replacing the batteries, do not mix up old and new ones.



Keep tools and other metal objects far away from the positive and negative ends of the battery. Exposing metal objects to both ends of the battery may cause a short circuit and generate electric shock .



Do not store the batteries close to flammable materials. Do not expose the batteries to any heat source, such as fire or sparks, etc. Do not transport the battery with any flammable or combustible materials.



There are some corrosive chemicals in the battery box, disassembling the battery is prohibited.



Do not short circuit batteries or throw battery into the fire to avoid explosion. Dispose the batteries through legal recycling center.

⚠ Caution

1.Do not use pliers, cable wire or any metal item to connect the ends of battery directly.

2.Do not use the wheelchair when it is charging.

3.Do not use non-standard power supply (for example: generator or inverter), even the voltage and frequency meets the requirements.

4.Do not bend or pull the power wire, especially near plug to prevent the power wire from being damaged.

5.Keep children and pets far away from the power wire, never allow them to bite or chew on it.

6.Hold the plug if you wish to pull out the power wire.

7.If the circuit breaker is tripped too many times while the batteries are charging, unplug the charger immediately and contact the dealer or professional technical support.

8.In this guide, all the warranty and operations are referring to lithium batteries.

9.Do not smoke or ignite around the battery.

10.The operating temperature of the battery is -5℃ to 40℃.

⚠ Caution

1.Charging the battery continuously for a long time before the first use can reduce the battery's service life (charge the battery for the first time only when the last red LED on the control panel flashes, in the way, can the battery be fully activated.)

2.For charging new battery for the first time, it must be fully charged (about 24 hrs) to ensure the battery to be fully activated.

3.Check if the battery has been fully charged before use, charge it if the battery is in low power. For battery of non-first-use, the charging time is about 5 hrs; if the power has been fully run out, it takes 10-12 hrs to charge to full until the red LED on the charger turns green.

4.The recommended charging time for the battery is 8-12 hrs.

5.Whenever the wheelchair is used, the battery shall be recharged until the power LED on the charger turns green. If the wheelchair is not in use for a long time, charge the battery full every 2 months; If the battery has no power for a long time, the battery can be damaged and is not usable anymore, or even cause damage to the wheelchair.

6.Battery of incorrect specification, voltage or capacity is strictly prohibited to use, which may damage your wheelchair or the wheelchair will not be able to achieve its optimum performance.

7.We suggest fully charge up the batteries ahead of a long trip.

Install/Remove the Battery

⚠ Caution

Please make sure you power off the wheelchair before installing or removing the batteries.

Removing the battery:

Press the lock button (As shown in figure H1), then pull the battery handle (As shown in figure H2). Pull the battery from the battery tube.





H1

H2

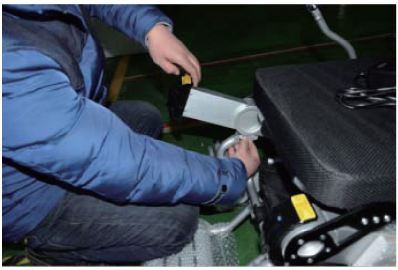



Installing the battery

Hold the battery handle, insert the other side of the battery into the right- side opening of the battery tube until the battery is all the way inside, then insert the red power plug into the bottom opening of the battery tube.

Charge the Battery

1.Use available standard alternating current (AC 110-220 V, 50-60 Hz) for charging, the charging port is in front of the control panel below.

2.Make sure that you power off the wheelchair before charging.

3.Insert the charging cable of the charger into the charging port in front of the control panel below. (As shown in figure I1) or you can also charge the battery directly (as shown in I2)



I1

3.1Insert the other side of the charger into the wall socket. If the red indicator light is on, it shows it's charging.

3.2The indicator light to see the next picture: red display power supply, orange display charge, the green display charging is completed;



I2



5.After the charger indicator's light changes from red to green, keep charging the batteries for 30 minutes to ensure they are full charged. Unplug the external wall plug first, then unplug the cable from the control panel.

6.Please charge the battery in an appropriate ambient temperature, the recommended ambient temperature for charging is between 5℃ to 40℃.

Over Discharge Protection Device

When the battery of the electric wheelchair runs out of power, the over discharge protection device will shut the batteries off to protect them against excessive discharge. Users should notice that when the over discharge protection device is activated, the maximum speed of the wheelchair will be reduced.

Over-Current Protection Device

The electric wheelchair is also equipped with an over-current protection device. If the current provided to the motor is excessive, the electronic fuse will close the current.

If there is any malfunctioning when operating the wheelchair, the over-current protection device will be activated, the driving wheels will stop rotating. In this process, the fuse will cut off the current, prevent the motor from being damaged from overheating. (See the control panel section)

Clean the Battery Socket

⚠ Caution

1.Check whether the battery case, the positive and negative ends of the battery are corroded or not.

2.Check whether the plastic battery box has been assembled completely.

3.Use battery cleaning tools - medium sandpaper to clean the battery port.
Attention: after cleaning the batteries port, it should be light and dry.

4.Clean up all the dust of the metal particles carefully.

5.Do not touch your skin or clothing with battery materials. Battery has acidic material, and may lead to harmful burns. If you accidentally touched the materials, immediately wash your skin thoroughly with cold water. If the battery materials ever make contact with your eyes, seek medical attention immediately

Folding/Unfolding

Caution

After any adjustment, repair or maintenance, please make sure all accessory parts are installed tightly before operating this wheelchair, otherwise it may cause injuries to the user and/or damage to the wheelchair.

The weight of the FALCON wheelchair (with batteries) is 26.5 KG, do not attempt to lift the wheelchair while the user is sitting on it. Grip the edge of the seat frame, never hold the handrail or back of chair to lift.

Folding Steps:

1.Make sure the power is turned off.

2.Take off the seat cushion

3.Unlock the latch on the back of the wheelchair

4.Pull up the footrests

5.Grip top of the backrest with one hand, front of the wheelchair with another hand, push towards each other until the wheelchair is in its upright position.

6.The FALCON wheelchair is now completely folded.

Folding

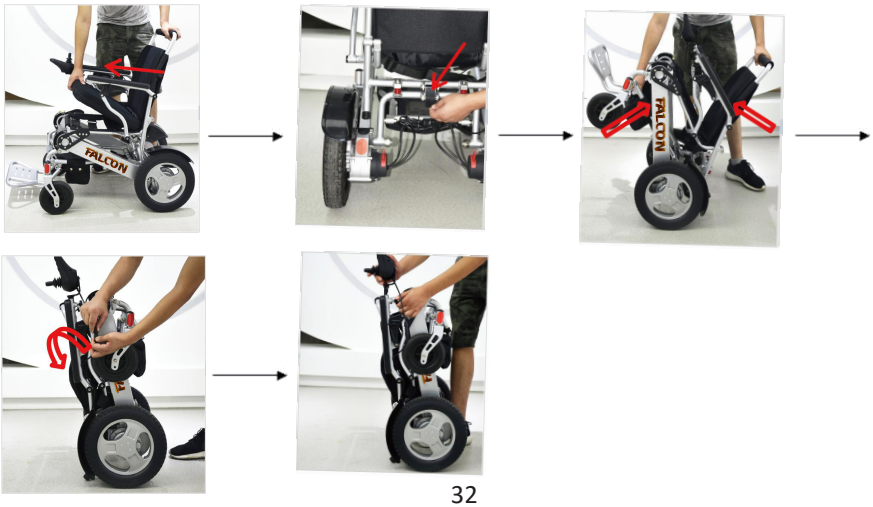

Unfolding



Step:

1.Grip top of the backrest with one hand, front of the wheelchair with another hand, pull away from each other.

2.Lock the latch on the back of the wheelchair.

3.Put the seat cushion on the wheelchair

4.Pull down the footrests.

5.Install the controller joystick (Refer to the joystick installation instruction section)

6.The FALCON wheelchair is now completely unfolded and ready to operate.

Reclining Backrest

Backrest Reclining

Steps:

1.Pull up the spring handle.

2.Push down the backrest tube when the spring handle under force.

3.Release the spring handle at any angle you want to keep.

4.Finish adjusting the reclining backrest angle .

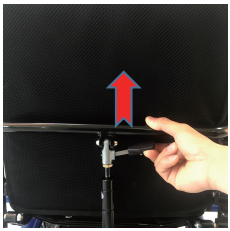




Reclining Backrest recovery

Steps:

1.Pull up the spring handle.

2.The spring is automatically extended to the stroke position (when the the spring handle under force).

3.Reclining Backrest recover to original position.




Maintenance

Regular maintenance will both increase the lifespan and improve the performance of your FALCON wheelchair.

Cleaning

1.Clean your wheelchair often, wipe off any dust or dirt especially on or around motors and wheels.

2.Do not clean your wheelchair with oil or chemical fluids.

3.Do not rinse the wheelchair with water, wipe down the surface with a damp cloth, then wipe off any water marks with a dry cloth.

4.Wash the seat cushion only if necessary, it can be hand washed.

Routine Check

1.Check the wheelchair often for any loose fasteners or cables.

2.Check the batteries periodically for corrosion

Storage

1.Always store your wheelchair in a clean and dry area.

2.Perform a detailed check before using the wheelchair after storage.

Troubleshooting

Diagnostic System

The speed display on the joystick also functions as a diagnostic indicator for your power chair. When the light is green, the power chair is functioning correctly, and if it starts flickering, then there's an issue.

1.If it's the first time that the indicator is flickering, power off the power chair, turn it on after a few seconds and recheck the diagnostic indicator. If it continues to flicker, then refer to the diagnostic chart for more information.

2.Issues from motor, brake, battery, wire connection and other parts of the power chair can trigger the diagnostic indicator to flicker.

3.There will be a pause after the initial flickering, follow the flickering pattern to find out which part is causing the problem from the diagnostic chart.

Diagnostic Chart

Flicker Pattern	Hall malfunction of left motor	Solving Recommendations
Flickers one time slowly	Hall malfunction of right motor	Check the welding connection of the left motor and the internal hall component.
Flickers two times slowly	Hall malfunction of right motor	Check the welding connection of the right motor and the internal hall component.
Flickers three times slowly	Malfunction of battery charger	Try a different charger. If the problem persists,check the battery cable to make sure it's connected tightly.
Flickers four times slowly	Malfunction of left motor	Check the cable connected from controller to the left motor, make sure it's connected tightly.
Flickers five times slowly	Malfunction of right motor	Check the cable connected from controller to the right motor, make sure it's connected tightly.
Flickers six times slowly	Malfunction of left brake	Check the cable connected from controller to the left brake, make sure it's connected tightly.
Flickers seven times slowly	Malfunction of right brake	Check the cable connected from controller to the right brake, make sure it's connected tightly.
Flickers eight times slowly	Malfunction of controller	Contact our technical support team for more assistance.
Flickers nine times slowly	Malfunction of cable	Check the controller coupler connection, make sure it's connected tightly.

Flickers four times quickly	Over current of left motor	Release the rocker can eliminate the malfunction
Flickers five times quickly	Over current of right motor	Release the rocker can eliminate the malfunction

Warranty

The Warranty Scope

The warranty instruction:

Warranty parts	Warranty period	Exclusions to Warranty
Main frame	Three years	Malfunction caused by improper use and handling. Modifying the wheelchair without dealer or manufacturer's authorization.
Motor wheel	The warranty of reducer and PU tires is one year; other parts are two years.	Exceeding the weight limit leading to damage to motors or opening the motors without dealer or manufacturer's authorization.
Battery	Six months	Dealer and manufacturer are not responsible for injuries to user and/or damage to the batteries and wheelchair if the user charges the batteries with improper techniques.
Controller	One year	Malfunction caused by improper use and handling. Modifying the wheelchair without dealer or manufacturer's authorization.
Joystick	One year	Malfunction caused by improper use and handling. Modifying the wheelchair without dealer or manufacturer's authorization.

The Scope of the No Guarantee

1.No Warranty:

a)Back cushion, seat cushion, armrest foam cotton, backrest foam cotton, decorating parts are damaged after use.

b)Damage caused by mal-operation, accident, abuse, improper installation and repair.

c)Damage caused by refitting the product without the written consent of the manufacturer

d)Damage caused by exceeding the maximum weight limit.

1.If the serial number of the electric wheelchair is not the original serial number, having been modified or no longer matches with the serial number of the warranty card, or the serial number of the warranty card has been revised, there will not be any warranty.

2.This warranty only applies to the original buyer, and is not transferable.

Within the permissible scope of the law, this warranty will take the place of any other warranty (e.g., written or oral, express or implied warranty, including merchantability, or suitability for a purpose warranty), are all based on this warranty.

Warranty Card

The warranty card must be handed over to the customer support department of the manufacturer in 15 days after the purchase.

The user name		ID number	
Address		Contact number	
Model		Product number	
Purchasing date		Month Day Year	
Manufacturer			
Supplier (Stamp or signature)			
Supplier phone(address)			

1. The warranty statement:

The dealer should confirm the problems of the wheelchair first. Under the condition of using incorrectly, if is the quality problem, the dealer needs to fix or change the parts.

2. No warranty:

1) Incorrect operation and maintenance
2) Using incompatible replacement part
3) Accident or misuse caused by mechanical damage
4) Consumable items are not in the warranty scope, such as tire,bearing,bulb,etc.
5) Any unauthorized conversion.
6) Any damage caused by natural disasters or accidents, such as typhoon, flood and earthquake.
7) This warranty does not include the routine maintenance or detection service.
8) This warranty only applies to the original buyer, transferring is not allowed.